UNISTRUT®
Metal Framing

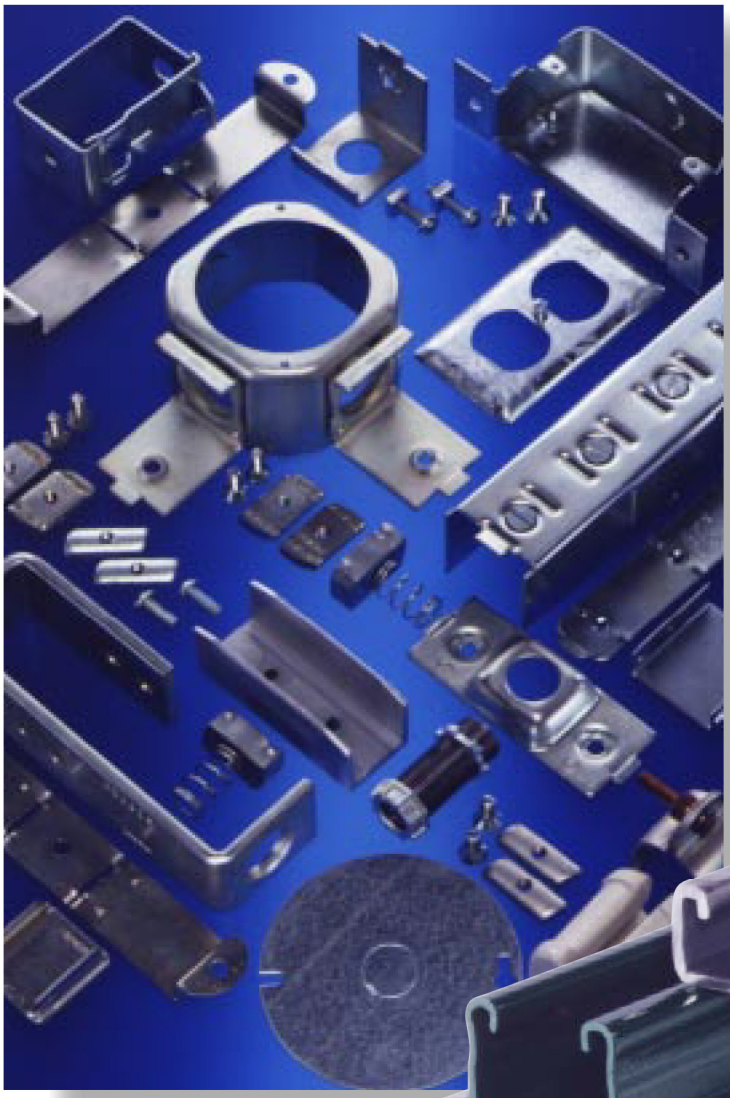

ELECTRICAL CONSTRUCTION

APPLICATION, INSTALLATION, SPECIFICATION GUIDE

Listed under new U/L Standard 5B

Where industry pros turn —

UNISTRUT®
Metal Framing

INTRODUCTION

The Unistrut metal framing system includes an exclusive combination of channel, fittings and hardware listed under **new UL classification 5B**. This classification covers strut-type channel raceways and fittings for use in accordance with Article 352 of the National Electrical Code, NFPA 70. Included are metal strut-type channel raceways at least .071 inch (1.81mm) thick and metal or non-metal closure strips at least .040 inch (1.02mm) thick.

The Unistrut system requires no welding, drilling or other complex fabrication techniques. This means faster, easier solutions for virtually any electrical support problem.

Unistrut channel offers structural and spanning capabilities not available with conventional surface raceway products and is available in continuous lengths of up to 20 feet. Just as important, it is part of an integrated system that can be used for raceways, trapeze hangers, cable-tray supports, lighting grids, fluorescent-fixture supports and countless other electrical applications.

Since connections are readily adjustable, the Unistrut system offers unsurpassed flexibility and adapts easily to job-site conditions.

And with local stocks, a greater variety of fittings and accessories, and a range of important project support services, the nationwide network of Unistrut Service Centers helps you meet the toughest project requirements and tightest deadlines.

Simple as 1,2,3

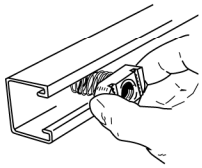

1 Insert spring nut anywhere along continuous slot of channel.

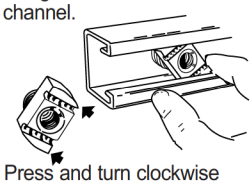

2 Press and turn clockwise until nut engages inturned channel edges.

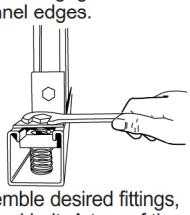

3 Assemble desired fittings, nut and bolt. A turn of the wrench–it's done.

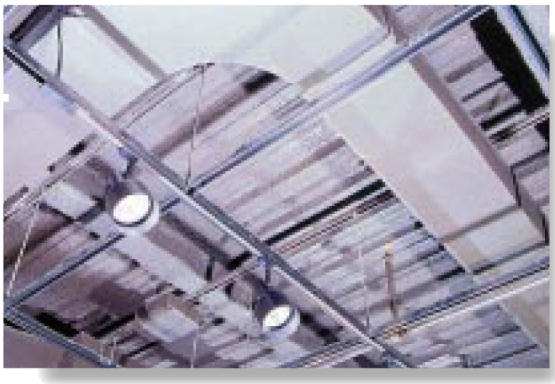

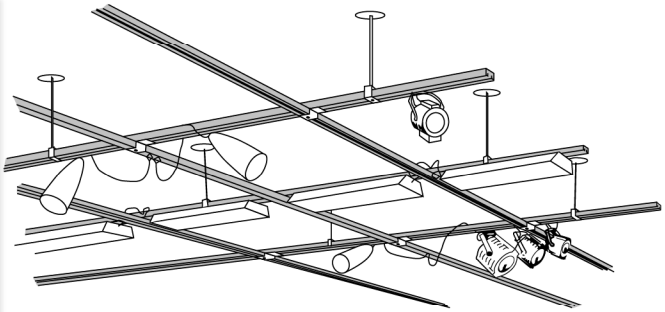

CEILING GRID WITH LIGHTING SUPPORTS
This Unistrut grid effectively supports a variety of overhead services, including both lighting and air-handling duct work.

©1997 Unistrut

to get the job done right!

CONTENTS

Lighting Supports
- Fluorscent Fixture Applications 4
- High-bay Fixture Applications 5

Mounting Options 5
Channel and Related Components 6
Nuts 7
Florescent Fixture/Raceway Hangers . . 7
Finishes 7
Electrical Accessories 8-13
Technical Data 14-18
Guide Specification 19

Note: All dimensions in parenthesis are millimeters, unless otherwise indicated.

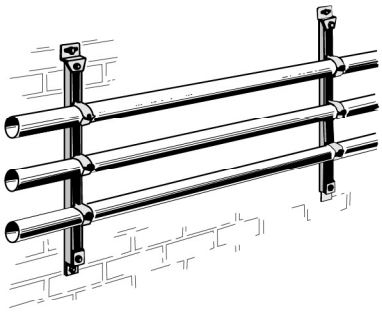

WALL-MOUNTED CONDUIT SUPPORTS
Wall-mounted Unistrut channel and pipe clamps work together to provide an ideal support system for this vertical conduit run.

CABLE TRAY SUPPORTS
The Unistrut system provides support solutions to match the many twists and turns of this cable tray installation.

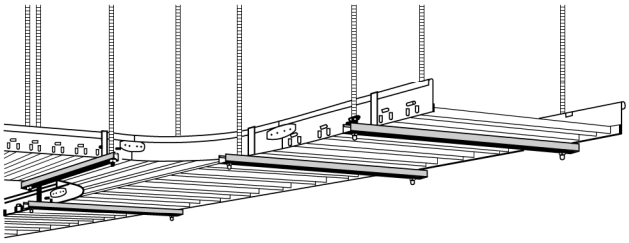

TRAPEZE HANGERS FOR CONDUIT SUPPORT
Trapeze hangers made from Unistrut channel suspended from Unistrut beam clamps provide dependable support for this conduit run.

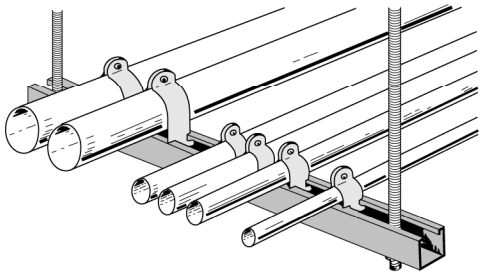

FLUORESCENT FIXTURES - RACEWAY APPLICATIONS

Knockout connection system

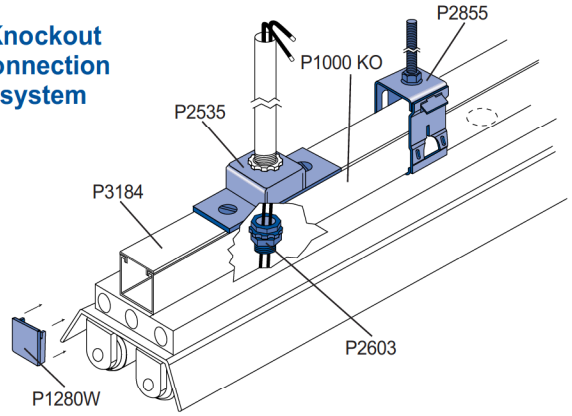

Fixture attached to raceway by P2603 1/2" nipple assembly at channel knockout. P1280W end cap, P3184 closure strip, P2535 conduit connector, and P2855 raceway hanger complete the assembly. For splicing channel into continuous runs, use splice fitting P3922.

Slot-down connection system

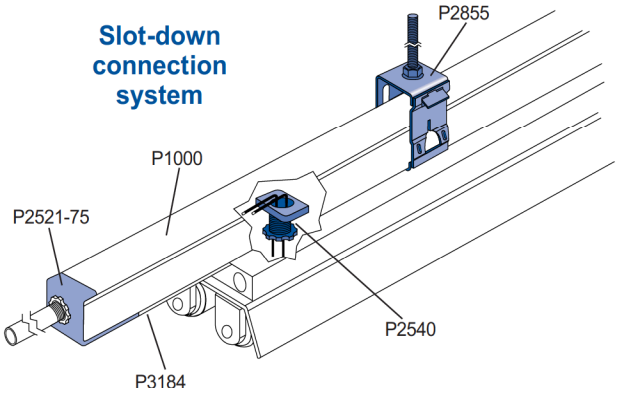

Conduit enters raceway by means of a P2521-75 end connector. Open section of channel slot is closed by cut length of P3184 closure strip. Fixture is attached to and wired from P2540 wiring stud nut. P2855 raceway hanger supports raceway. For splicing together a continuous run, use splice fitting P3922.

Plug-in system

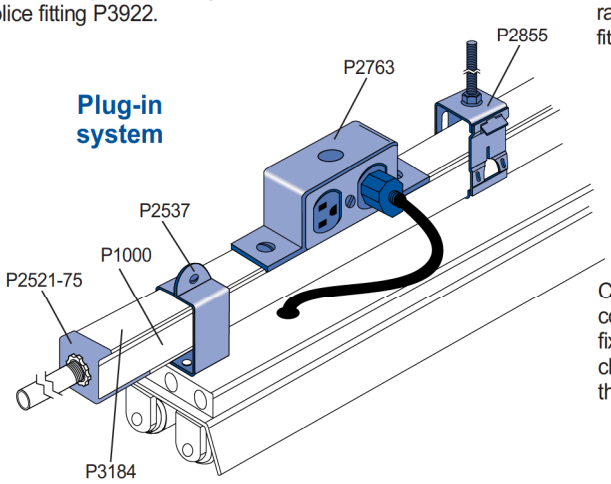

Conduit enters raceway by means of P2521-75 end connector. P2763 duplex receptacle feeds plug-in type fixture. P3184 closure strip covers open slot areas of channel. P2855 raceway hanger supports raceway from threaded rod. P2537 hanger supports fixture from raceway.

FLUORESCENT FIXTURES - SUPPORT APPLICATIONS

Spring-nut attachment system

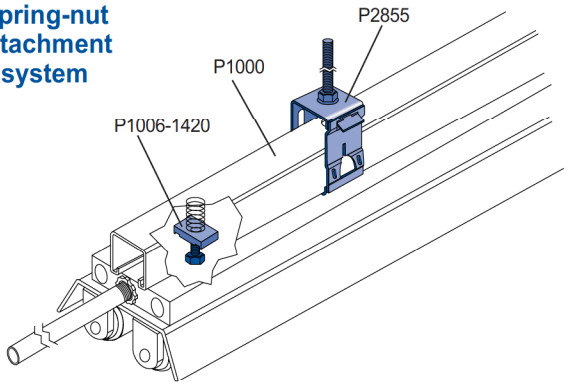

Conduit connects through knockout in fixture. Fixture is supported by P1006-1420 spring nut and 1/4" round-head machine screw. Assembly is supported by P2855 raceway hanger.

Slotted channel attachment system

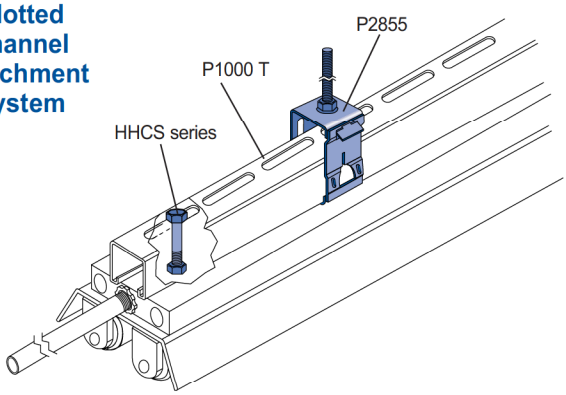

Conduit connects through knockout in fixture. Fixture is supported by HHCS series hex bolt and hex nut. Raceway is supported by P2855 raceway hanger. To splice a continuous run, use splice fitting P3922.

LIGHTING RACEWAY/SUPPORT SYSTEMS

HIGH-BAY FIXTURE RACEWAY APPLICATIONS

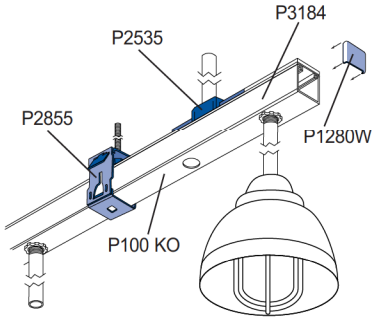

H.I.D. knockout mounted system

Fixture attached to and wired from raceway by 1/2" nipple assembly of desired length at channel knockout. P1280W end cap, P3184 closure strip, P2535 conduit connector, and P2855 raceway hanger complete assembly. For splicing channels into continuous raceway runs, use splice fitting P3922.

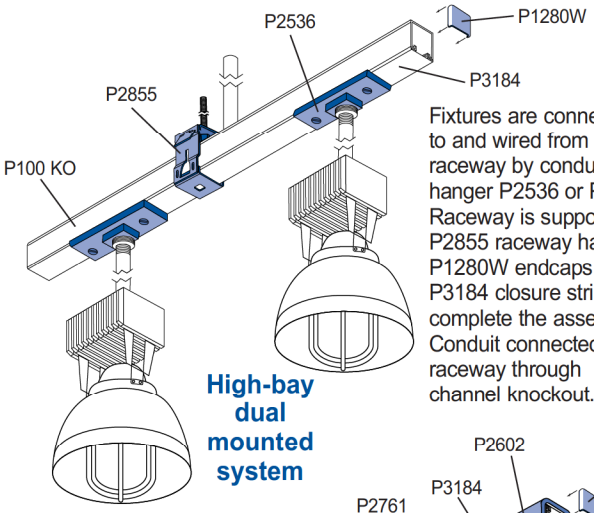

High-bay dual mounted system

Fixtures are connected to and wired from raceway by conduit hanger P2536 or P2535. Raceway is supported by P2855 raceway hanger. P1280W endcaps and P3184 closure strip complete the assembly. Conduit connected to raceway through channel knockout.

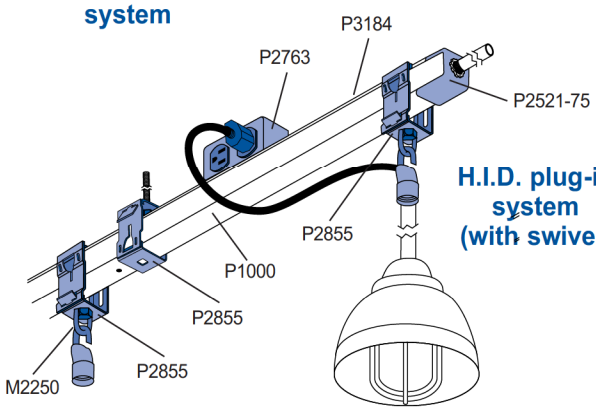

H.I.D. plug-in system (with swivel)

Fixtures, supported by P2855 raceway hangers and M2250 swivel hangers, plug into receptacle mounted in P2763 receptacle unit. P2855 hangers also support raceway. P2521-75 end connector joins conduit to raceway. P1280W end caps (not shown) and P3184 closure strip complete assembly.

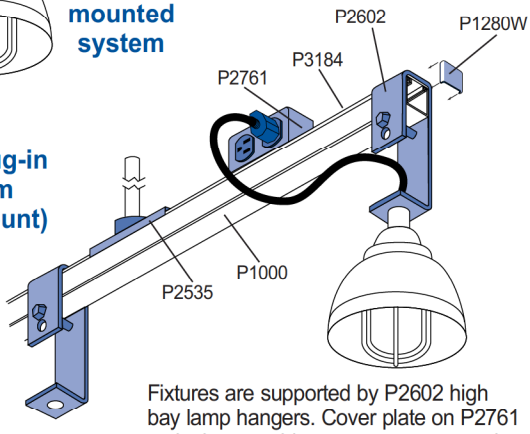

H.I.D. plug-in system (rigid mount)

Fixtures are supported by P2602 high bay lamp hangers. Cover plate on P2761 outlet box provides access to receptacle box. Raceway is supported and wired by top mounted P2535 conduit connectors. P1280W end caps and P3184 closure strip complete assembly.

Fixtures attached to and wired from P2535 or P2536 conduit hangers mounted to slot side of channel. Raceway can be wired by P2521-75 end connector as shown, or conduit can enter through available knockout. Ballasts are connected at the knockouts by fixture adapter. In remote ballast installations, follow manufacturers instructions. P2855 raceway hangers support both types of installations. P3184 closure strip and P1280W end caps complete assembly. For continuous raceways, use splice fitting P3922.

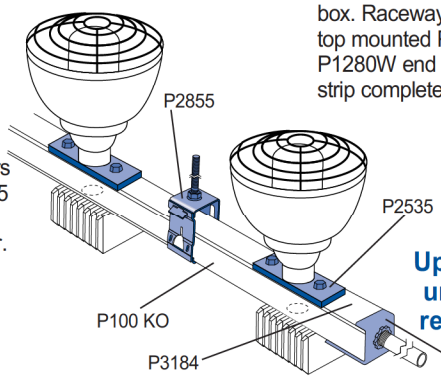

Uplighting with underhung or remote ballast

MOUNTING OPTIONS

A variety of clamps simplifies attachment to structural beams.

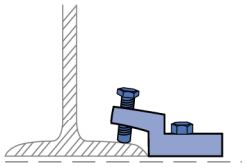

P1379-S
(use in pairs only)

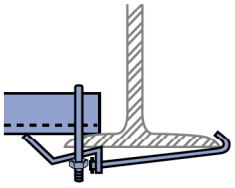

P2867

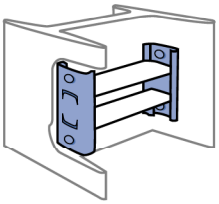

P3087

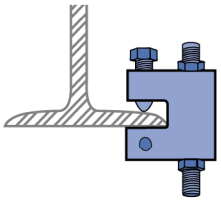

P2675–P2676

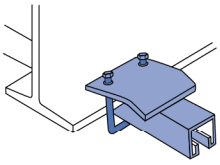

P2785–P2786
(use in pairs only)

Other mounting options include concrete inserts, expansion anchors and powder-actuated fasteners.

CHANNEL

1-5/8" CHANNEL SELECTIONS

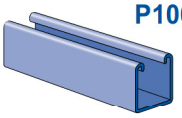

P1000
12 gage (2.7)
1 5/8" (41.3)x
1 5/8" (41.3)

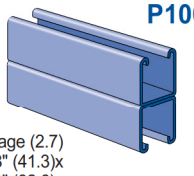

P1001
12 gage (2.7)
1 5/8" (41.3)x
3 1/4" (82.6)

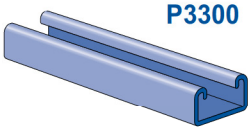

P3300
12 gage (2.7)
1 5/8" (41.3)x
7/8" (22.2)

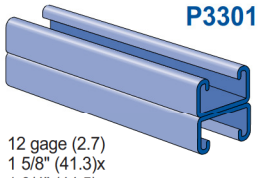

P3301
12 gage (2.7)
1 5/8" (41.3)x
1 3/4" (44.5)

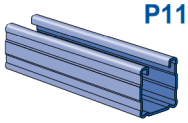

P1100
14 gage (1.9)
1 5/8" (41.3)x
1 5/8" (41.3)

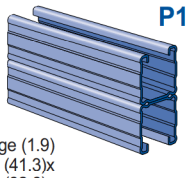

P1101
14 gage (1.9)
1 5/8" (41.3)x
3 1/4" (82.6)

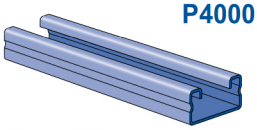

P4000
16 gage (1.5)
1 5/8" (41.3)x
13/16" (20.6)

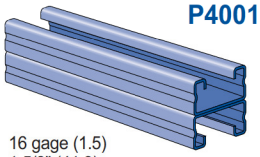

P4001
16 gage (1.5)
1 5/8" (41.3)x
1 5/8" (41.3)

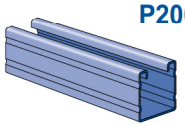

P2000
14 gage (1.9)
1 5/8" (41.3)x
1 5/8" (41.3)

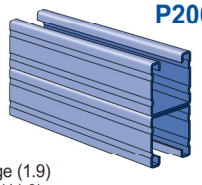

P2001
14 gage (1.9)
1 5/8" (41.3)x
3 1/4" (82.6)

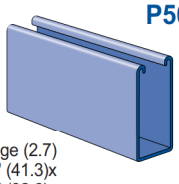

P5000
12 gage (2.7)
1 5/8" (41.3)x
3 1/4" (82.6)

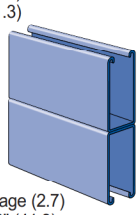

P5001
12 gage (2.7)
1 5/8" (41.3)x
6 1/2" (165.1)

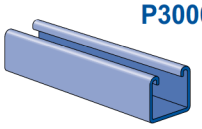

P3000
14 gage (1.9)
1 5/8" (41.3)x
1 3/8" (34.9)

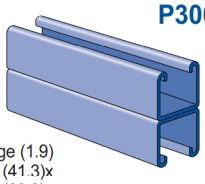

P3001
14 gage (1.9)
1 5/8" (41.3)x
2 3/4" (69.9)

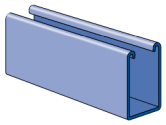

P5500
12 gage (2.7)
1 5/8" (41.3)x
2 7/16" (61.9)

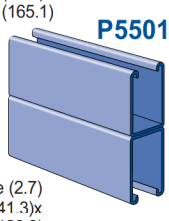

P5501
12 gage (2.7)
1 5/8" (41.3)x
4 7/8" (123.8)

PIERCED CHANNEL SELECTIONS

HS

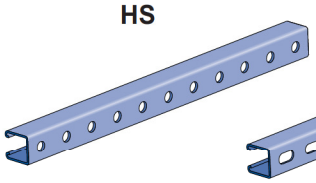

9/16" holes on
1 7/8" centers

T

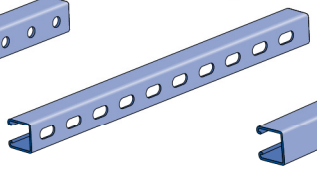

1 1/8" x 9/16" slots
on 2" centers

KO

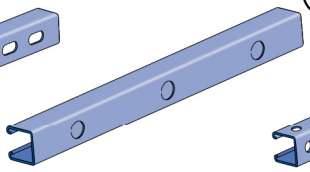

7/8" knockouts
on 6" centers

H3

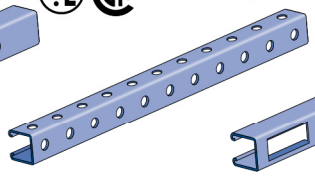

9/16" holes on
1 7/8" centers

DS

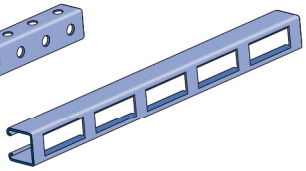

7/8" X 2 3/4" slots
on 3 1/2" centers

CONCRETE INSERTS

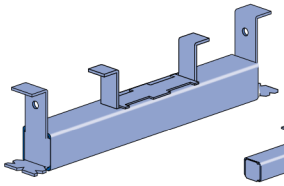

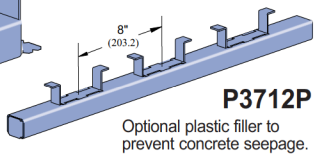

P3712P
Optional plastic filler to
prevent concrete seepage.

	Lgth	Wt. Lbs/C
P 3249	3"	85
P 3250	4"	100
P 3251	6"	130
P 3252	8"	159
P 3253	12"	227
P 3254	16"	270
P 3255	20"	357
P 3256	24"	399

	Lgth	Wt. Lbs/C
P 3257	32"	527
P 3257A	36"	616
P 3258	40"	661
P 3259	4'	786
P 3260	5'	1003
P 3261	6'	1173
P 3262	7'	1390
P 3263	8'	1560

	Lgth	Wt. Lbs/C
P 3264	9'	1741
P 3265	10'	1947
P 3266	12'	2334
P 3267	14'	2717
P 3268	16'	3116
P 3269	18'	3530
P 3270	20'	3882

CLOSURE STRIPS

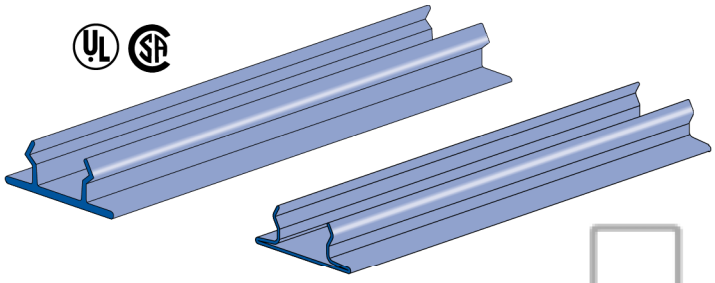

P3184 P
Material: GE Noryl®
Wt. 9.4 Lbs. / C Ft.
(14.0 kg/100 m)

P3184
Material: Steel
Wt. 47 Lbs. / C Ft.
(69.9 kg/100 m)

Standard length -10 feet.

NUTS/HANGERS

NUTS

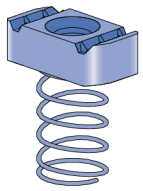

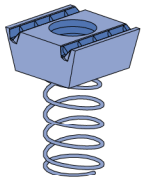

Part Number	Thread Size		WT. Lbs/C
P1006-			
1420	1/4"	20	7
P1007	5/16"	18	6
P1008	3/8"	16	10
P1009	7/16"	14	9
P1010	1/2"	13	12
P1012S	5/8"	11	21
P1023S	3/4"	10	21
P1024S	7/8"	9	21

for P1000, P1100, P2000 & P3000 channels

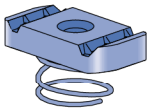

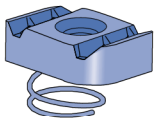

Part Number	Thread Size		WT. Lbs/C
P4006-			
1420	1/4"	20	7
P4007	5/16"	18	6
P4008	3/8"	16	9
P4009	7/16"	14	9
P4010	1/2"	13	8
P4012S	5/8"	11	11
P4023S	3/4"	10	11

for P3300, P4000 channels

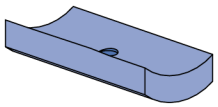

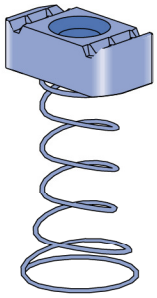

Part Number	Thread Size		WT. Lbs/C
P3016-			
0632	#6	32	2
0832	#8	32	2
1024	#10	24	4
1420	1/4"	20	4

for P3300, P4000 & P5000 channels

Part Number	Thread Size		WT. Lbs/C
P5506-			
1420	1/4"	20	1
P5507	5/16"	18	6
P5508	3/8"	16	10
P5509	7/16"	14	10
P5510	1/2"	13	12

for P5500 channel

FLUORESCENT FIXTURE HANGERS

P2537
P5537

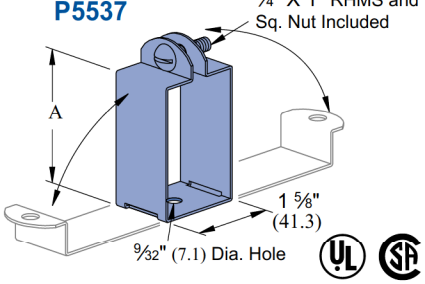

Hanger provides more than 1/2" (12.7) space between channel and fixtures.
Material: 18 gage (1.2)

Design Load 120 Lbs. (.5 kN)

Part Number	Use With Channel	"A" In	"A" mm	Weight/C Lbs	Weight/C kg
P2537	P1000 P1100 P2000 P3000	2 7/16	61.9	19	8.6
P5537	P5500	3 1/4	82.6	22	10.0
P2539	P1000 P1100 P2000	1 3/4	44.5	17	7.7
P3539	P3000	1 1/2	38.1	15	6.8
P5539	P5500	2 9/16	65.1	18	8.2

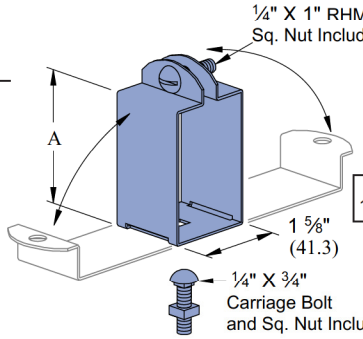

P2539
P3539
P5539

Design Load 120 Lbs. (.5 kN)

Hanger provides more than 1/8" (3.2) space between channel and fixtures.
Material: 18 gage (1.2)

RACEWAY HANGERS

P2755
P2756
P2757

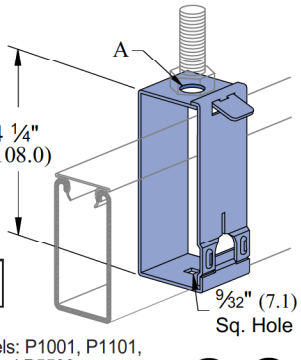

Design Load 120 Lbs. (.5 kN)

Use with channels: P1001, P1101, P2001, P5000 and P5500.
Material: 14 gage (1.9)

Part Number	"A" In	"A" mm	Weight/C Lbs	Weight/C kg
P2755	9/16	14.3	44	20
P2756	7/8	22.2	44	20
P2757	13/32	10.3	44	20
P2855	9/16	14.3	32	14.5
P2856	7/8	22.2	32	14.5
P2857	13/32	10.3	32	14.5

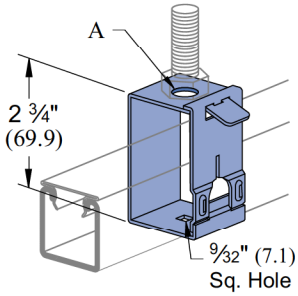

P2855
P2856
P2867

Design Load 120 Lbs. (.5 kN)

Use with channels: P1000, P1100, P2000, P3000, P3300, P4000, P4001, P4100 and P4101.
Material: 14 gage (1.9)

FINISHES

Pregalvanized channel is coated with zinc by hot-dipped process prior to roll forming of press operations. The zinc weight coating is 0.45 oz./side per square foot of material conforming to ASTM specification A-653.

Electro-galvanized parts, screws and nuts are coated with zinc electrolytically to commercial standards. (Federal Specification No. QQ-Z-325A.) Hot-dipped galvanized material is coated with zinc after being roll formed or after all manufacturing operations are completed. The zinc weight is 2 oz. per square foot of surface conforming to ASTM specifications Nos. A-123 and/or A-153.

Nuts, bolts and pipe clamps are electro-galvanized.

(Alternate finishes may be specified, such as pregalvanized finish and hot-dipped galvanized finish for various parts of the metal framing system. Refer to Unistrut General Engineering Catalog #12 and supplementary bulletins for the availability and appropriateness of the finish for various parts.)

ELECTRICAL ACCESSORIES

CONDUIT HANGER CONNECTION FOR 1/2" CONDUIT

P2535

Design Load
400 Lbs (1.3 kN)

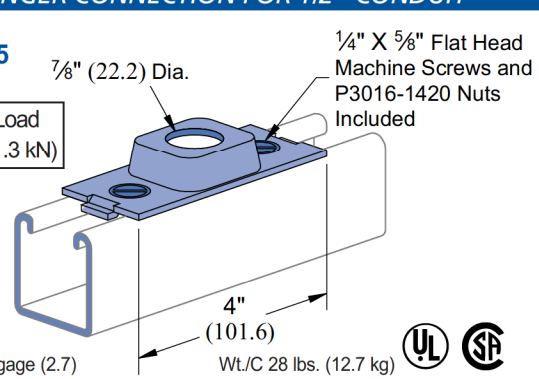

Material: 12 gage (2.7)
Wt./C 28 lbs. (12.7 kg)

CONDUIT HANGER CONNECTION FOR 3/4" CONDUIT

P2536

Design Load
200 Lbs (1.3 kN)

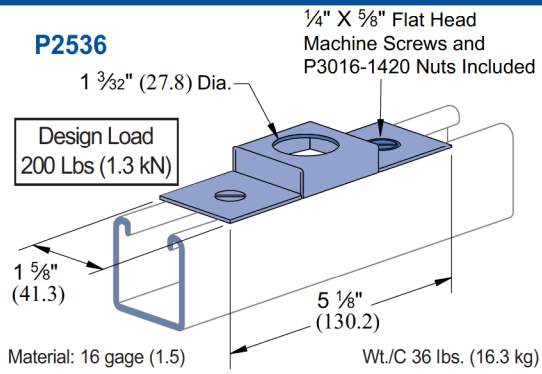

Material: 16 gage (1.5)
Wt./C 36 lbs. (16.3 kg)

OUTLET BOX CONNECTION

P2522

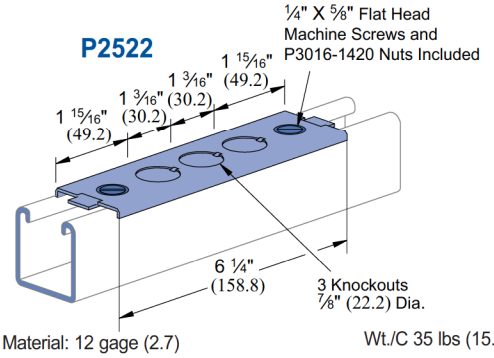

Material: 12 gage (2.7)
Wt./C 35 lbs (15.9 kg)

END CONNECTORS FOR 1/2" CONDUIT

P3521-50

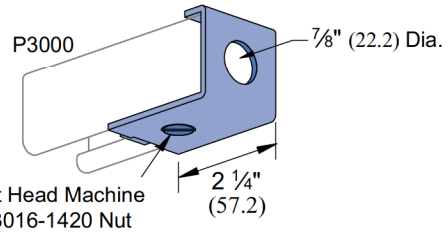

Material: 12 gage (2.7)
Wt./C 27 lbs. (16.3 kg)

END CONNECTORS FOR 1/2" & 3/4" CONDUIT

P2521-50
P2521-75

¼" X ⅝" Flat Head Machine Screw and P3016-1420 Nut Included

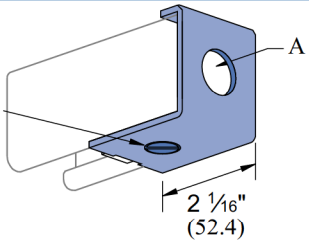

Part Number	Conduit Size A In	Weight/C Lbs	Weight/C kg
P2521-50	1/2	27	12.2
P2521-75	3/4	26	11.8

For Unistrut channels P1000, P1100 & P2000.
Material: 12 gage (2.7)

END CONNECTORS FOR 1/2" & 3/4" CONDUIT

P5521-50
P5521-75

¼" X ⅝" Flat Head Machine Screw and P3016-1420 Nut Included

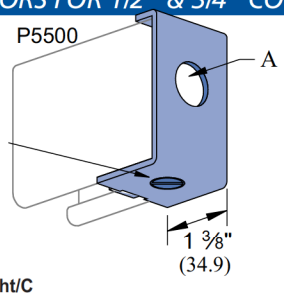

Part Number	Conduit Size A In	Weight/C Lbs	Weight/C kg
P5521-50	1/2	27	12.2
P5521-75	3/4	26	11.8

Material: 12 gage (2.7)

END CONNECTORS FOR 1/2" & 3/4" CONDUIT

P5021-50
P5021-75

¼" X ⅝" Flat Head Machine Screw and P3016-1420 Nut Included

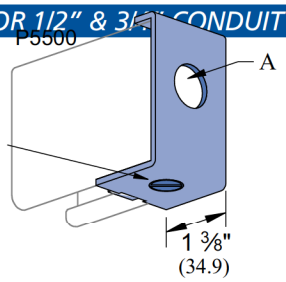

Part Number	Conduit Size A In	Weight/C Lbs	Weight/C kg
P5021-50	1/2	31	14.1
P5021-75	3/4	30	13.6

Material: 12 gage (2.7)

END CONNECTORS FOR 1" CONDUIT

P2521-100

¼" X ⅝" Flat Head Machine Screw and P3016-1420 Nut Included

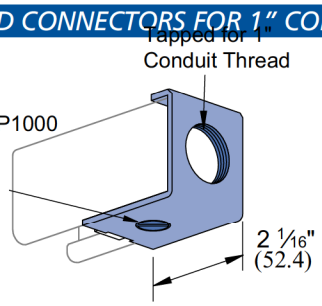

Not UL-listed or CSA approved
Material: 12 gage (2.7)
Wt./C 24 lbs. (10.9 kg)

ELECTRICAL ACCESSORIES

END CONNECTOR FOR 1" CONDUIT

P5021-100

Material: 12 gage (2.7)
Wt/C 28 Lbs (12.7 kg)

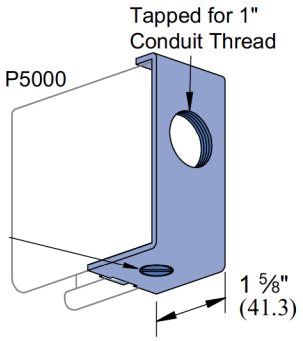

Not UL-listed or CSA approved

END CONNECTOR FOR 1" CONDUIT

P5521-100

Material: 12 gage (2.7)
Wt/C 24 Lbs (10.9 kg)

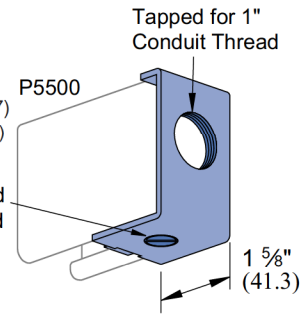

Not UL-listed or CSA approved

WIREWAY END CAPS

P1180 W through P5580 W

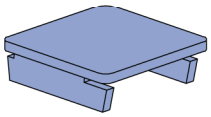

PART NUMBER	USE WITH	WEIGHT/C Lbs	kg
P1180 W	P1100	12	5.4
P1280 W	P1000	11	5.0
P2280 W	P2000	11	5.0
P3280 W	P3000	8	3.6
P4280 W	P4000	5	2.3
P5280 W	P5000	22	10.0
P5580 W	P5500	18	8.2

Material: .075" (1.9)

HIGHBAY LAMP HANGER

P2602

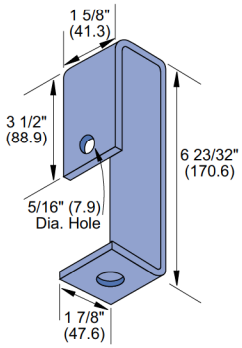

Material: 12 gage (2.7) Wt./C 153.8 lbs (69.8 kg)

FIXTURE WIRING NIPPLE

P2603

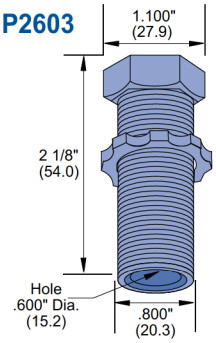

Wt./C 14 lbs (06.3 kg)

SPACER CLEVIS

P2541

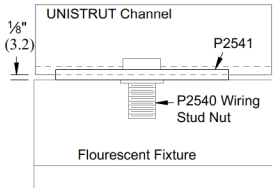

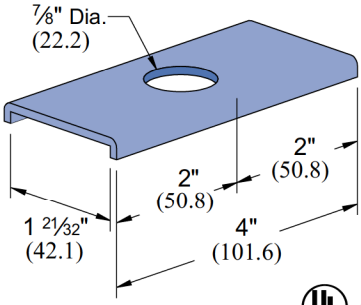

Material: 12 gage (2.7)
Wt./C 24 lbs (10.9 kg)

WIRING STUD NUT

P2540
P2540A

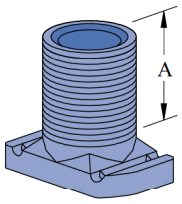

Material: Sintered metal.

PART NUMBER	CONDUIT SIZE A In	mm	WEIGHT/C Lbs	kg
P2540	1-1/8	28.6	10	4.5
P2540 A	5/8	15.9	8	3.6

FIXTURE STUD NUT

P3116-125

¼" x 20 Thd.

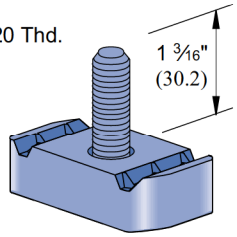

Wt/C 11 lbs (5.0 kg)

POLYPROPYLENE WIRE RETAINER

P2552

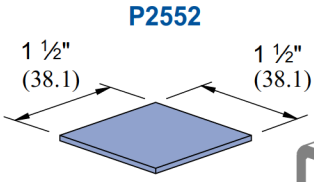

Retainer can be easily pushed into channel to support wires until closure strip is installed.

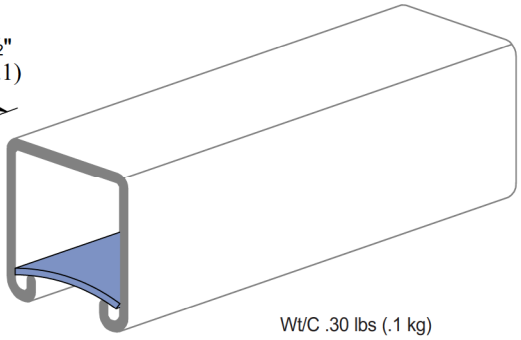

Wt/C .30 lbs (.1 kg)

ELECTRICAL ACCESSORIES

SPLICE FITTINGS

P3922 - P3926

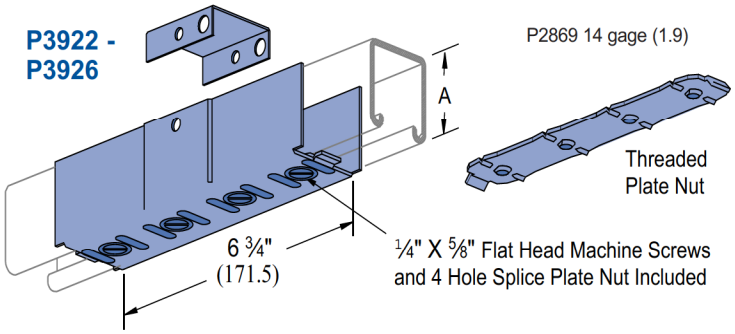

Assembly Number	Use With Channel	"A" In	"A" mm	Clevis Number	Back Clevis Number	Plate Nut Number	Weight/C Lbs	Weight/C kg
P3922	P1000 P1100 P2000	1 5/8	41.3	P2377	P2517	P2869	100	45.4
P3923	P3000	1 3/8	34.9	P3377	P2517	P2869	97	44.0
P3924	P4000	13/16	20.6	P5377	P2517	P2869	80	36.3
P3925	P5500	1 5/8	41.3	P2377	P5517	P2869	103	46.7
P3926	P5000	1 5/8	41.3	P2377	P5017	P2869	106	48.1

Material: 16 gage (1.6)

CONDUIT SWING FITTING

P2534-50
P2534-75

- Conduit hanger fittings allow a free swivel of 15° in one direction.
- Fitting may be mounted to the slot side of the Unistrut channel or to the back.

Wt./C 96 Lbs (43.5 kg)

Design Load 300 Lbs. (1.3 kN)

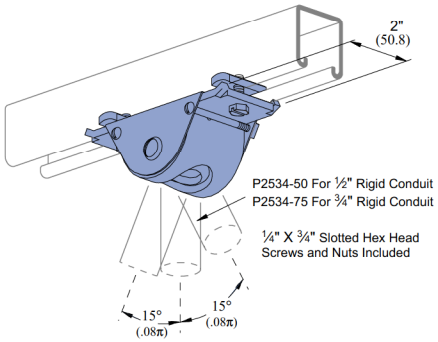

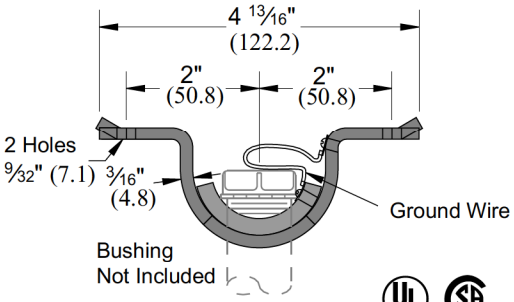

IN-CHANNEL JOINERS

P2900

Wt./C 20 lbs (9.1 kg)

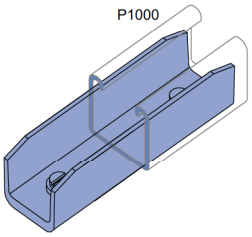

All Material: Cast Aluminum

P2901

Wt./C 35 lbs (15.9 kg)

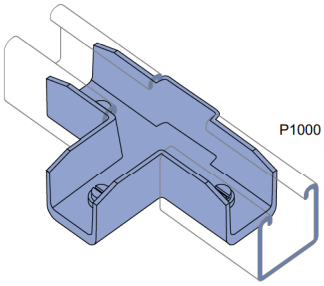

P2902

Wt./C 27 lbs (12.2 kg)

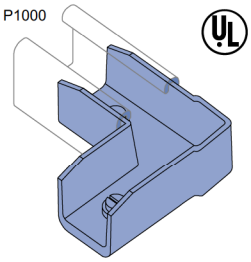

P2903

Wt./C 45 lbs (20.4 kg)

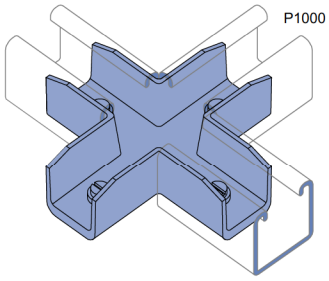

BRACKETS

P2513A- P2516A

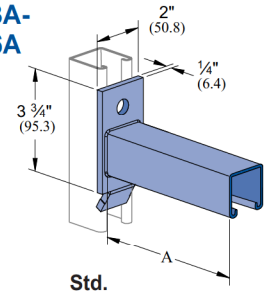

Part Number	Std. Lengths
P2513A	6"
P2514A	12"
P2515A	18"
P2516A	24"

P2513 - P2516

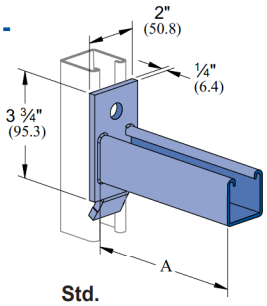

Part Number	Std. Lengths
P2513	6"
P2514	12"
P2515	18"
P2516	24"

P2542 - P2546

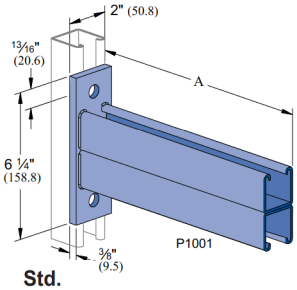

Part Number	Std. Lengths
P2542	12"
P2543	18"
P2544	24"
P2545	30"
P2546	36"

ELECTRICAL ACCESSORIES

DUPLEX GROUNDED RECEPTACLE

P2557

- 125 V, 15 amp receptacle, NEMA configuration S-15R, cover plate.
- #6 screws, nuts and wire connectors included.
- Leads are 14 gage 105˚C plastic covered.
- Ground wire is green 16 gage.

Finish: White powder coat.

Wt./C 38 Lbs (17.2)

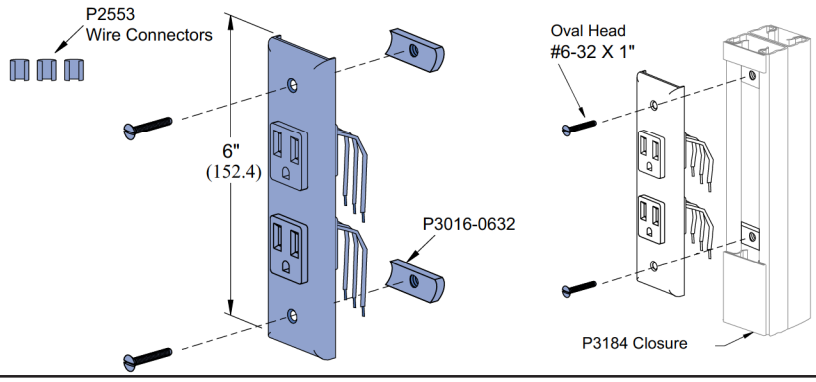

RECEPTACLE BOX

P2761
P2762

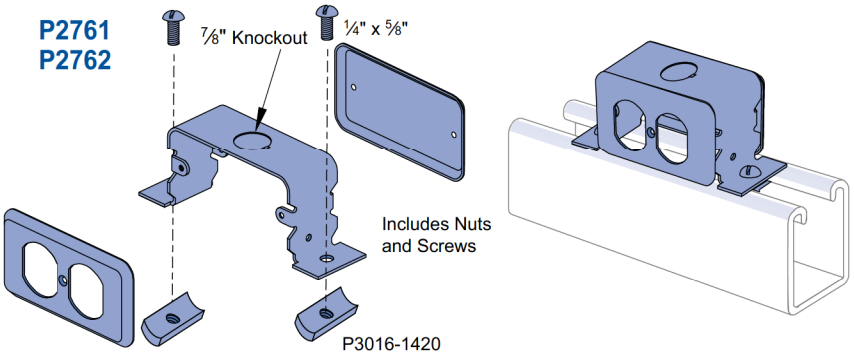

Part Number	Outlet	Weight/ Lbs	kg
P2761	Single	88	39.9
P2762	Duplex	88	39.8

RECEPTACLE UNIT

P2763
P2764
P2765

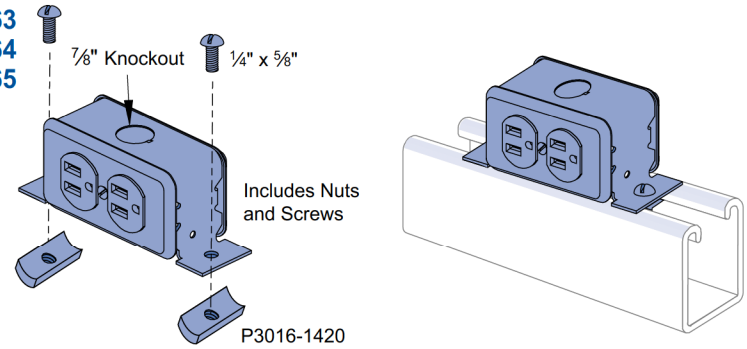

Part Number	Outlet	Weight/ Lbs	kg	NEMA Receptacle Configuration
P2763	125V	108	49	5-15R
P2764	250V	108	49	6-15R
P2765	277V	108	49	7-15R

JUNCTION BOXES

P2810

Wt./C 135 lbs (61.2 kg)

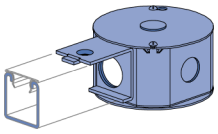

P2811

Wt./C 155 lbs (70.3 kg)

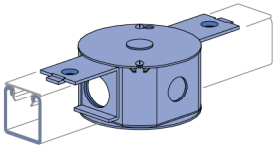

P2812

Wt./C 155 lbs (70.3 kg)

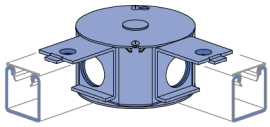

P2813

Wt./C 175 lbs (79.4 kg)

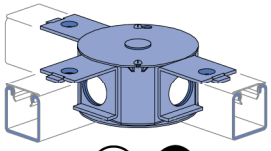

P2814

Wt./C 195 lbs (88.5 kg)

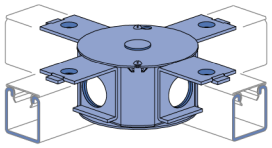

ALL JUNCTION BOXES ILLUSTRATED ON THIS PAGE:

- UL Listed • Junction boxes are for P1000, P1100 or P2000 channels • All channels entries in box are 1 1/8" (28.6) diameter finished holes with no bushing needed. All knockouts are 7/8" (22.2) diameter. • 1/4" x 5/8" flat head machine screws and P3016-1420 nuts included.

PORCELAIN CABLE CLAMPS

P1787A through P1795 B

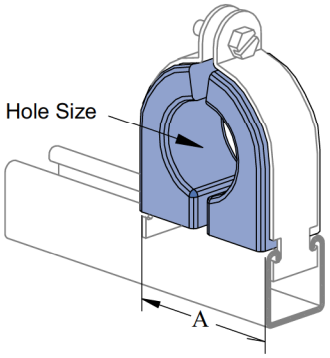

Use with steel clamp and Everdur hardware. Order clamp separately.
Material: Dry process porcelain white glaze.

Assembly Number	Order Steel Clamp Number	Hole Size In	Hole Size mm	"A" In	"A" mm	Weight/C Lbs	Weight/C kg
P1787 A		3/8	9.5			54	24.5
P1787 B	P1113 E	1/2	12.7	1 7/8	47.6	53	24.0
P1787 C		5/8	15.9			51	23.1
P1788		3/4	19.1			94	42.6
P1788 A	P1115 E	7/8	22.2	2 3/8	60.3	89	40.4
P1788 B		1	25.4			84	38.1
P1788 C		1 1/8	28.6			81	36.7
P1789		1 1/4	31.8			122	55.3
P1789 A	P1117 E	1 3/8	34.9	2 7/8	73.0	119	54.0
P1789 B		1 1/2	38.1			114	51.7
P1789 C		1 5/8	41.3			111	50.3
P1790		1 3/4	44.5			238	108.0
P1790 A	P1119 E	1 7/8	47.6	4	101.6	232	105.2
P1790 B		2	50.8			221	100.2
P1790 C		2 1/8	54.0			217	98.4
P1791	P1120 E	2 1/4	57.2	4 1/2	114.3	274	124.3
P1791 A		2 3/8	60.3			267	121.1
P1791 B	P1120 E	2 1/2	63.5	4 1/2	114.3	259	117.5
P1791 C		2 5/8	66.7			252	114.3
P1792		2 3/4	69.9			347	157.4
P1792 A	P1121 E	2 7/8	73.0	5 1/8	130.2	336	152.4
P1792 B		3	76.2			325	147.4
P1792 C		3 1/8	79.4			314	142.4
P1793		3 1/4	82.6			495	224.5
P1793	P1123 E	3 3/8	85.7	6 1/8	155.6	480	217.7
P1793 A		3 1/2	88.9			465	210.9
P1793 C		3 5/8	92.1			450	204.1
P1794		3 3/4	95.3			712	323.0
P1794 A	P1124 E	3 7/8	98.4	7 1/4	184.2	696	315.7
P1794 B		4	101.6			683	309.8
P1794 C		4 1/8	104.8			670	303.9
P1795		4 1/4	108.0			645	292.6
P1795 A	P1124 E	4 3/8	111.1	7 1/4	184.2	632	286.7
P1795 B		4 1/2	114.3			617	279.9

4" (101.6) BUS BAR MAPLE CLAMPS

P2647 A through P2647 F

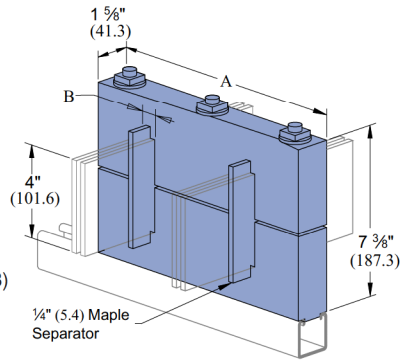

- 1/2" studs, square nuts and washers are included.
- Channel nuts must be ordered separately.
- Bus bar maple clamps also available in 1/4" (6.4) x 2" (50.8) and 1/4" (6.4) x 6" (152.4)

Material: Paraffin impregnated maple hardwood.

Assembly Number	"A" In	"A" mm	"B" In	"B" mm	No. Bus Separators	No. Bars Per Leg	Weight/C Lbs	Weight/C kg
P2647 A	8 1/2	215.9	9/32	7.1	0	1	421	191.0
P2647 B	9 1/2	241.3	13/16	20.6	2	2	465	210.9
P2647 C	10 1/2	266.7	1 5/16	33.3	4	3	509	230.9
P2647 D	11 1/2	292.1	1 13/16	46.0	6	4	553	250.8
P2647 E	12 1/2	317.5	2 3/8	60.3	8	5	597	270.8
P2647 F	13 1/2	342.9	2 7/8	73.0	10	6	631	286.2

MAPLE CABLE CLAMPS

P1690 through P1697

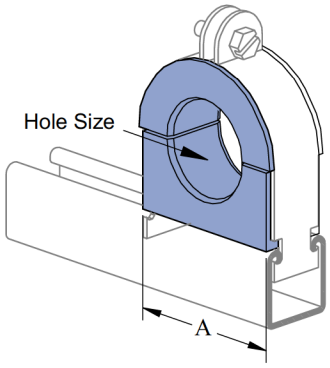

- Use with steel clamp and Everdur hardware. Order clamp separately.
- Specify hole size when ordering.

Material: Paraffin impregnated maple hardwood.

Assembly Number	Order Steel Clamp Number	Hole Size In	Hole Size mm	"A" In	"A" mm	Weight/C Lbs	Weight/C kg
P2647 A	P1113 E	0 – 5/8	0 – 15.9	1 1/2	38.1	24	10.9
P1691	P1115 E	1/2 – 1	12.7 – 25.4	2 1/8	54.0	42	19.1
P1692	P1117 E	3/4 – 1 1/2	19.1 – 38.1	2 5/8	66.7	54	24.5
P1693	P1118 E	1 1/4 – 1 3/4	31.8 – 44.5	3	76.2	65	29.5
P1694	P1119 E	1 1/2 – 2 1/4	38.1 – 57.2	3 5/8	92.1	84	38.1
P1695	P1120 E	2 – 2 1/2	50.8 – 63.5	4 1/8	104.8	107	48.5
P1696	P1121 E	2 1/4 – 3	57.2 – 76.2	4 5/8	117.5	123	55.8
P1697	P1123 E	3 – 4	76.2 – 101.6	5 3/4	146.1	163	73.9

CABLE SADDLES

P1753 FG
P1754 FG
P1753 PO
P1754 PO

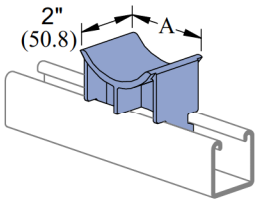

Material: FG - Fiberglass Reinforced Polyester.
PO - Dry Process White Glazed Porcelain.

Assembly Number	"A" In	"A" mm	Maximum Cable Diameter In	Maximum Cable Diameter mm	Weight/C Lbs	Weight/C kg
P1753 FG	2 13/16	71.4	3	76.2	12	5.4
P1754 FG	3 3/4	95.3	4 1/2	114.3	17	7.7
P1753 PO	3	76.2	3	76.2	75	34.0
P1754 PO	4	101.6	4 1/2	114.3	95	43.1

MAPLE CABLE SADDLES

P2649 A
through
P2649 H

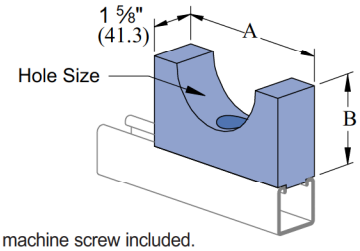

- 3/8" flat head machine screw included.
- Specify hole size when ordering.
- Order channel nuts as required.

Material: Paraffin impregnated maple hardwood.

Assembly Number	Hole Size In	Hole Size mm	"A" In	"A" mm	"B" In	"B" mm	Weight/C Lbs	Weight/C kg
P2649 A	0 – 1	0 – 25.4	3	76.2	1 3/4	44.5	31	14.1
P2649 B	1 – 1 1/2	25.4 – 38.1	3 1/2	88.9	2	50.8	38	17.2
P2649 C	1 1/2 – 2	38.1 – 50.8	4	101.6	2 1/4	57.2	47	21.3
P2649 D	2 – 2 1/2	50.8 – 63.5	4 1/2	114.3	2 1/2	63.5	57	25.9
P2649 E	2 1/2 – 3	63.5 – 76.2	5	127.0	2 3/4	69.9	68	30.8
P2649 F	3 – 3 1/2	76.2 – 88.9	5 1/2	139.7	3	76.2	80	36.3
P2649 G	3 1/2 – 4	88.9 – 101.6	6	152.4	3 1/4	82.6	94	42.6
P2649 H	over 4	over 101.6						

MAPLE CABLE CLAMPS

P2645 A
through
P2645 H

- 3/8" studs, square nuts and washers included.
- Specify hole size when ordering.
- Order channel nuts as required.

Material: Paraffin impregnated maple hardwood.

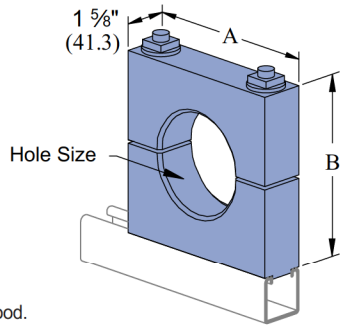

Assembly Number	Hole Size In	Hole Size mm	"A" and "B" Dimensions In	"A" and "B" Dimensions mm	Weight/C Lbs	Weight/C kg
P2645 A	0 – 1	0 – 25.4	3 1/2	88.9	84	38.1
P2645 B	1 – 1 1/2	25.4 – 38.1	4	101.6	102	46.3
P2645 C	1 1/2 – 2	38.1 – 50.8	4 1/2	114.3	121	54.9
P2645 D	2 – 2 1/2	50.8 – 63.5	5 1/2	139.7	165	74.8
P2645 E	2 1/2 – 3	63.5 – 76.2	6	152.4	189	85.7
P2645 F	3 – 3 1/2	76.2 – 88.9	6 1/2	165.1	215	97.5
P2645 G	3 1/2 – 4	88.9 – 101.6	7	177.8	243	110.2
P2645 H	over 4	over 101.6				

SWIVEL HANGERS

M2037
M2050

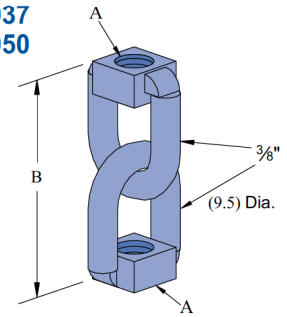

M2137
M2150

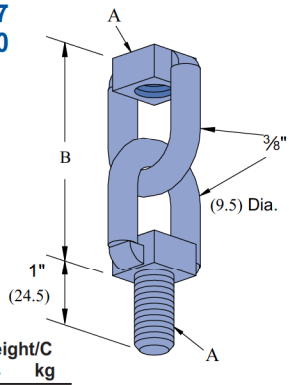

Part Number	"A"	"B" In	"B" mm	Weight/C Lbs	Weight/C kg
M2037	3/8" - 16	2 31/32"	67.5	23	10.4
M2050	1/2" - 13	2 3/4"	69.9	32	14.5
M2137	3/8" - 16	2 29/32"	67.5	27	12.2
M2150	1/2" - 13	2 3/4"	69.9	45	20.4

M2250

Wt./C 18 lbs (8.2 kg)

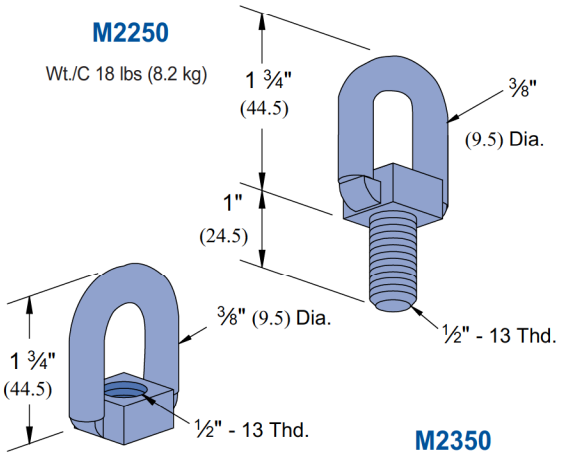

M2350

Wt./C 20 lbs (9.1 kg)

BEAM AND COLUMN LOADS

Span		Channel	Beam Data						Column Data			
			Maximum Allowable Uniform Load		Deflection At Uniform Load		Uniform Load At Deflection Span/240		Maximum Column Load Applied At C.G. (K= .80)		Maximum Design Load Applied At Column Face	
In	mm		Lbs	kg	In	mm	Lbs	kg	Lbs	kg	Lbs	kg
24	610	P1000	1690	767	0.06	1	1690	767	10200	4627	3490	1583
		P1001	3130*	1420*	0.02	1	3130*	1420*	23560	10687	6360	2885
		P1100	1390	630	0.06	2	1390	630	7670	3479	2800	1270
		P1101	1850*	839*	0.02	1	1850*	839*	17690	8024	4990	2263
		P2000	1170	531	0.06	1	1170	531	6200	2812	2350	1066
		P2001	1370*	621*	0.01	0	1370*	621*	14450	6554	4120	1869
		P3000	1290	585	0.07	2	1290	585	9330	4232	3100	1406
		P3001	2660*	1207*	0.03	1	2660*	1207*	21310	9666	5660	2567
		P3300	600	272	0.10	3	600	272	7380	3348	2140	971
		P3301	1660*	753*	0.06	1	1660*	753*	16390	7434	4110	1864
		P4000	400	181	0.11	3	380	172	4190	1901	1440	653
		P4001	690*	313*	0.04	1	690*	313*	9800	4445	2650	1202
		P4100	440	200	0.11	3	410	186	5340	2422	1630	739
		P4101	910*	413*	0.05	1	910*	413*	11720	5316	3030	1374
		P5000	5260†	2386†	0.03	1	5260†	2386†	15850	7189	5700	2585
		P5001	6170*†	2799*†	0.01	0	6170*†	2799*†	30170	13685	7730	3506
		P5500	3280	1488	0.04	1	3280	1488	13080	5933	4640	2105
		P5501	4680*	2123*	0.01	0	4680*	2123*	30870	14002	8540	3874
36	914	P1000	1130	513	0.13	3	1130	513	8400	3810	3150	1429
		P1001	3130*	1420*	0.07	2	3130*	1420*	22610	10256	6190	2808
		P1100	930	422	0.13	3	930	422	6170	2799	2500	1134
		P1101	1850*	839*	0.05	1	1850*	839*	17000	7711	4860	2204
		P2000	780	354	0.13	3	780	354	4650	2109	2030	921
		P2001	1370*	621*	0.05	1	1370*	621*	13900	6305	4020	1823
		P3000	860	390	0.15	4	860	390	7950	3606	2800	1270
		P3001	2410	1093	0.08	2	2410	1093	20410	9258	5480	2486
		P3300	400	181	0.22	6	270	122	5920	2685	1790	812
		P3301	1130	513	0.13	3	1130	513	15080	6840	3820	1733
		P4000	270	122	0.24	6	170	77	2900	1315	1140	517
		P4001	690*	313*	0.14	4	690*	313*	8980	4073	2440	1107
		P4100	300	136	0.25	6	180	82	4160	1887	1340	608
		P4101	790	358	0.14	4	790	358	10680	4844	2790	1266
		P5000	3510	1592	0.07	2	3510	1592	11580	5253	5000	2268
		P5001	6170*†	2799*†	0.02	1	6170*†	2799*†	29330	13304	7650	3470
		P5500	2190	993	0.09	2	2190	993	10190	4622	4160	1887
		P5501	4680*	2123*	0.03	1	4680*	2123*	29720	13481	8400	3810
48	1219	P1000	850	386	0.22	6	760	345	6540	2966	2750	1247
		P1001	2400	1089	0.13	3	2400	1089	21270	9648	5970	2708
		P1100	700	318	0.23	6	610	277	4460	2023	2110	957
		P1101	1850*	839*	0.12	3	1850*	839*	16030	7271	4690	2127
		P2000	590	268	0.23	6	510	231	2790	1266	1550	703
		P2001	1370*	621*	0.11	3	1370*	621*	13120	5951	3880	1760
		P3000	650	295	0.26	7	500	227	6600	2994	2470	1120
		P3001	1810	821	0.15	4	1810	821	19160	8691	5240	2377
		P3300	300	136	0.40	10	150	68	3830	1737	1400	635
		P3301	850	386	0.23	6	730	331	13260	6015	3470	1574
		P4000	200	91	0.42	11	90	41	1650	748	830	376
		P4001	520	236	0.25	6	410	186	7830	3552	2200	998
		P4100	220	100	0.43	11	100	45	2620	1188	1020	463
		P4101	590	268	0.25	6	470	213	9210	4178	2500	1134
		P5000	2630	1193	0.12	3	2630	1193	7230	3279	3950	1792
		P5001	5650†	2563†	0.05	1	5650†	2563†	28170	12778	7540	3420
		P5500	1640	744	0.15	4	1640	744	7040	3193	3480	1579
		P5501	4680*	2123*	0.08	2	4680*	2123*	28120	12755	8190	3715
60	1524	P1000	680	308	0.35	9	490	222	4980	2259	2360	1070
		P1001	1920	871	0.20	5	1920	871	19560	8872	5690	2581
		P1100	560	254	0.36	9	390	177	3250	1474	1750	794
		P1101	1530	694	0.20	5	1530	694	14780	6704	4470	2028
		P2000	470	213	0.36	9	330	150	1780	807	1170	531
		P2001	1270	576	0.20	5	1270	576	12110	5493	3700	1678
		P3000	520	236	0.41	10	320	145	5310	2409	2150	975
		P3001	1450	658	0.23	6	1450	658	17550	7961	4940	2241
		P3300	240	109	0.62	16	100	45	2450	1111	1080	490
		P3301	680	308	0.37	9	460	209	10900	4944	3070	1393
		P4000	160	73	0.66	17	60	27	1060	481	620	281
		P4001	420	191	0.40	10	260	118	6350	2880	1920	871
		P4100	180	82	0.69	17	70	32	1680	762	780	354
		P4101	470	213	0.39	10	300	136	7330	3325	2180	989

*Load limited by spot weld shear †Bearing load limited by capacity

(cont'd on next page)

See notes on page 16

BEAM AND COLUMN LOADS (CONTINUED)

Span		Channel	Beam Data						Column Data			
			Maximum Allowable Uniform Loan		Deflection At Uniform Load		Uniform Load At Deflection Span/240		Maximum Column Load Applied At C.G. (K= .80)		Maximum Design Load Applied At Column Face	
In	mm		Lbs	kg	In	mm	Lbs	kg	Lbs	kg	Lbs	kg
		P5000	2110	957	0.18	5	2110	957	5020	2277	3170	1438
		P5001	4520†	2050†	0.08	2	4520†	2050†	26670	12097	7390	3352
		P5500	1310	594	0.24	6	1310	594	5130	2327	2910	1320
		P5501	3870	1755	0.13	3	3870	1755	26060	11821	7920	3592
72	1829	P1000	560	254	0.50	13	340	154	4030	1828	2060	934
		P1001	1600	726	0.28	7	1600	726	17460	7920	5360	2431
		P1100	460	209	0.51	13	270	122	2560	1161	1500	680
		P1101	1270	576	0.28	7	1270	576	13260	6015	4220	1914
		P2000	390	177	0.52	13	230	104	1240	562	900	408
		P2001	1060	481	0.28	7	1060	481	10890	4940	3490	1583
		P3000	430	195	0.59	15	220	100	4330	1964	1860	844
		P3001	1200	544	0.33	8	1080	490	15570	7062	4610	2091
		P3300	200	91	0.89	23	70	32	1700	771	860	390
		P3301	560	254	0.52	13	320	145	8080	3665	2640	1197
		P4000	130	59	0.93	24	40	18	730	331	480	218
		P4001	350	159	0.57	15	180	82	4620	2096	1630	739
		P4100	150	68	0.99	25	50	23	1160	526	610	277
		P4101	390	177	0.56	14	210	95	5240	2377	1840	835
		P5000	1750	794	0.26	7	1750	794	3810	1728	2640	1197
		P5001	3770	1710	0.11	3	3770	1710	24830	11263	7200	3266
		P5500	1090	494	0.34	9	950	431	4060	1842	2510	1139
		P5501	3220	1461	0.19	5	3220	1461	23540	10678	7590	3443
84	2134	P1000	480	218	0.68	17	250	113	3390	1538	1820	826
		P1001	1370	621	0.39	10	1240	562	14980	6795	4970	2254
		P1100	400	181	0.70	18	200	91	2120	962	1310	594
		P1101	1090	494	0.38	10	990	449	11460	5198	3920	1778
		P2000	340	154	0.72	18	170	77	910	413	710	322
		P2001	910	413	0.39	10	820	372	9440	4282	3250	1474
		P3000	370	168	0.80	20	160	73	3620	1642	1630	739
		P3001	1030	467	0.45	12	790	358	13240	6006	4230	1919
		P3300	170	77	1.20	31	50	23	**	**	**	**
		P3301	480	218	0.71	18	240	109	5940	2694	2250	1021
		P4000	110	50	1.25	32	30	14	**	**	**	**
		P4001	300	136	0.78	20	140	64	3400	1542	1370	621
		P4100	130	59	1.36	35	30	14	**	**	**	**
		P4101	340	154	0.78	20	150	68	3850	1746	1550	703
		P5000	1500	680	0.36	9	1470	667	3070	1393	2250	1021
		P5001	3230	1465	0.15	4	3230	1465	22670	10283	6960	3157
		P5500	940	426	0.47	12	700	318	3380	1533	2210	1002
		P5501	2760	1252	0.26	7	2760	1252	20560	9326	7160	3248
96	2438	P1000	420	191	0.89	23	190	86	2920	1324	1620	735
		P1001	1200	544	0.50	13	950	431	12120	5498	4510	2046
		P1100	350	159	0.92	23	150	68	1810	821	1160	526
		P1101	960	435	0.51	13	760	345	9390	4259	3560	1615
		P2000	290	132	0.91	23	130	59	700	318	570	259
		P2001	790	358	0.50	13	630	286	7770	3524	2960	1343
		P3000	320	145	1.03	26	120	54	3080	1397	1430	649
		P3001	900	408	0.59	15	610	277	10570	4794	3800	1724
		P3300	150	68	1.58	40	40	18	**	**	**	**
		P3301	420	191	0.93	24	180	82	4550	2064	1930	875
		P4000	100	45	1.70	43	20	9	**	**	**	**
		P4001	260	118	1.01	26	100	45	2600	1179	1170	531
		P4100	110	50	1.72	44	30	14	**	**	**	**
		P4101	300	136	1.03	26	120	54	2950	1338	1320	599
		P5000	1320	599	0.47	12	1130	513	2580	1170	1970	894
		P5001	2830	1284	0.20	5	2830	1284	20170	9149	6660	3021
		P5500	820	372	0.61	16	540	245	2900	1315	1990	903
		P5501	2420	1098	0.34	9	2420	1098	17120	7765	6620	3003
108	2743	P1000	380	172	1.14	29	150	68	2540	1152	1450	658
		P1001	1070	485	0.64	16	750	340	9570	4341	4030	1828
		P1100	310	141	1.16	29	120	54	1580	717	1040	472
		P1101	850	386	0.64	16	600	272	7420	3366	3180	1442
		P2000	260	118	1.17	30	100	45	550	249	470	213
		P2001	710	322	0.64	16	500	227	6150	2790	2640	1197
		P3000	290	132	1.33	34	100	45	2450	1111	1230	558
		P3001	800	363	0.75	19	480	218	8350	3787	3380	1533
		P3300	130	59	1.95	50	30	14	**	**	**	**
		P3301	380	172	1.19	30	140	64	3590	1628	1670	757

*Load limited by spot weld shear †Bearing load limited by capacity **$\frac{KL}{r} > 200$

(cont'd on next page)

See notes on page 16

BEAM AND COLUMN LOADS (CONTINUED)

Span In	Span mm	Channel	Beam Data: Maximum Allowable Uniform Loan Lbs	kg	Deflection At Uniform Load In	mm	Uniform Load At Deflection Span/240 Lbs	kg	Column Data: Maximum Column Load Applied At C.G.(K= .80) Lbs	kg	Maximum Design Load Applied At Column Face Lbs	kg
108	2743	P4000	90	41	2.18	55	20	9	**	**	**	**
		P4001	230	104	1.27	32	80	36	2050	930	1010	458
		P4100	100	45	2.22	56	20	9	**	**	**	**
		P4101	260	118	1.27	32	90	41	2330	1057	1140	517
		P5000	1170	531	0.59	15	890	404	2230	1012	1760	798
		P5001	2510	1139	0.25	6	2510	1139	17330	7861	6280	2849
		P5500	730	331	0.78	20	420	191	2550	1157	1800	816
		P5501	2150	975	0.43	11	2150	975	13610	6173	5970	2708
120	3048	P1000	340	154	1.40	36	120	54	2240	1016	1310	594
		P1001	960	435	0.79	20	610	277	7750	3515	3610	1637
		P1100	280	127	1.43	36	100	45	1400	635	940	426
		P1101	760	345	0.78	20	490	222	6010	2726	2850	1293
		P2000	230	104	1.41	36	80	36	450	204	390	177
		P2001	640	290	0.79	20	400	181	4990	2263	2360	1070
		P3000	260	118	1.64	42	80	36	1990	903	1070	485
		P3001	720	327	0.93	24	390	177	6770	3071	3020	1370
		P3300	120	54	2.47	63	20	9	**	**	**	**
		P3301	340	154	1.47	37	120	54	**	**	**	**
		P4000	80	36	2.65	67	20	9	**	**	**	**
		P4001	210	95	1.59	40	70	32	**	**	**	**
		P4100	90	41	2.75	70	20	9	**	**	**	**
		P4101	240	109	1.61	41	70	32	**	**	**	**
		P5000	1050	476	0.73	19	720	327	1980	898	1590	721
		P5001	2260	1025	0.31	8	2260	1025	14260	6468	5800	2631
		P5500	660	299	0.96	24	340	154	2270	1030	1650	748
		P5501	1930	875	0.52	13	1840	835	11020	4999	5380	2440

*Load limited by spot weld shear †Bearing load limited by capacity **$\frac{KL}{r} > 200$

NOTE:
1. Above loads include the weight of the member. This weight must be deducted to arrive at the net allowable load the beam will support.
2. Long span beams should be supported in such a manner as to prevent rotation and twist.
3. Allowable uniformly distributed loads are listed for various simple spans, that is, a beam on two supports. If load is concentrated at the center of the span, multiply load from the table by 0.5 and corresponding deflection by 0.8.

ELEMENTS OF SECTION

Channel	Areas Of Section In²	cm²	Axis 1 - 1: I In⁴	cm⁴	S In³	cm³	r In	cm	Axis 2 - 2: I In⁴	cm⁴	S In³	cm³	r In	cm
P1000	0.556	3.60	0.185	7.70	0.202	3.30	0.577	1.50	0.236	9.80	0.290	4.70	0.651	1.70
P1001	1.112	7.20	0.930	38.70	0.572	9.40	0.915	2.30	0.472	19.60	0.580	9.50	0.651	1.70
P1100	0.417	2.70	0.149	6.20	0.166	2.70	0.597	1.50	0.183	7.60	0.230	3.70	0.662	1.70
P1101	0.834	5.40	0.741	30.80	0.456	7.50	0.942	2.40	0.366	15.20	0.450	7.40	0.662	1.70
P2000	0.340	2.20	0.124	5.20	0.140	2.30	0.605	1.50	0.151	6.30	0.190	3.00	0.667	1.70
P2001	0.681	4.40	0.616	25.60	0.379	6.20	0.951	2.40	0.303	12.60	0.370	6.10	0.667	1.70
P3000	0.503	3.20	0.121	5.00	0.154	2.50	0.490	1.20	0.205	8.50	0.250	4.10	0.639	1.60
P3001	1.007	6.50	0.693	24.70	0.431	7.10	0.767	1.90	0.411	173.10	0.510	8.30	0.639	1.60
P3300	0.398	2.60	0.037	1.50	0.072	1.20	0.306	0.78	0.145	6.00	0.178	2.90	0.603	1.50
P3301	0.797	5.10	0.177	7.40	0.202	3.30	0.471	1.20	0.289	12.00	0.356	5.80	0.603	1.50
P4000	0.239	1.50	0.023	0.96	0.048	0.79	0.308	0.78	0.091	3.80	0.112	1.80	0.617	1.60
P4001	0.478	3.10	0.101	4.20	0.125	2.00	0.460	1.20	0.182	7.60	0.224	3.70	0.617	1.60
P4100	0.284	1.90	0.025	1.00	0.053	0.90	0.298	0.80	0.106	4.40	0.130	2.10	0.609	1.50
P4101	0.574	3.70	0.114	4.70	0.141	2.30	0.447	1.10	0.212	8.80	0.260	4.30	0.609	1.50
P5000	0.897	5.80	1.099	45.70	0.628	10.30	1.107	2.80	0.359*	14.90	0.442*	7.20	0.695	1.80
P5001	1.794	11.60	5.578*	232.20	1.716*	28.10	1.864	4.70	0.719*	29.90	0.884*	14.50	0.695	1.80
P5500	0.826	4.70	0.523	21.80	0.391	6.40	0.848	2.20	0.335	13.90	0.410	6.80	0.679	1.70
P5501	1.453	9.40	2.811	117.00	1.153	18.90	1.391	3.50	0.669	27.80	0.820	13.50	0.679	1.70

I - Moment of Inertia

S - Section Modulus

r - Radius of Gyration

*These are effective section properties.

ELEMENTS OF SECTION

RACEWAY DATA

UNISTRUT channel is listed by Underwriters' Laboratories as a surface metal raceway. Snap-in closure strip is used to complete the raceway. Accessory parts listed by Underwriters are noted on drawings.

Tables show maximum number of conductors when raceway is not employed with fixtures or where the clearance between fixtures and raceway is greater than 1/2 inch. In all cases the snap-in cover is required to complete raceway enclosure.

P1000, &-KO, P1100, &-KO, P2000 &-KO

	Number & Conductor Size (AWG)				
	14Ga.	12Ga.	10Ga.	8Ga.	6Ga.
THWN, THHN	88	66	42	20	14
XHHW	58	46	35	16	12
T, TW	57	44	34	16	9
THW	37	30	24	12	9
RH	33	27	16	9	6
RHH, RHW	23	20	16	9	6

P3000, &-KO

	Number & Conductor Size (AWG)				
	14Ga.	12Ga.	10Ga.	8Ga.	6Ga.
THWN, THHN	72	54	34	17	12
XHHW	48	37	29	13	10
T, TW	46	36	28	13	7
THW	30	25	20	10	7
RH	27	22	13	7	5
RHH, RHW	19	16	13	7	5

P3300, P4000

	Number & Conductor Size (AWG)				
	14Ga.	12Ga.	10Ga.	8Ga.	6Ga.
THWN, THHN	40	30	19	9	6
XHHW	26	21	16	7	5
T, TW	26	20	15	7	4
THW	17	14	11	6	4
RH	15	12	7	4	3
RHH, RHW	10	9	7	4	2

P5000, &-KO

	Number & Conductor Size (AWG)				
	14Ga.	12Ga.	10Ga.	8Ga.	6Ga.
THWN, THHN	193	144	91	45	32
XHHW	128	101	78	37	27
T, TW	125	98	75	35	20
THW	81	67	54	28	20
RH	73	60	36	19	13
RHH, RHW	51	44	36	19	13

P5500, &-KO

	Number & Conductor Size (AWG)				
	14Ga.	12Ga.	10Ga.	8Ga.	6Ga.
THWN, THHN	141	105	66	33	23
XHHW	93	73	57	27	19
T, TW	91	58	55	26	15
THW	59	49	39	20	15
RH	53	44	26	14	10
RHH, RHW	37	32	26	14	10

CSA APPROVED MAXIMUM NUMBER OF WIRES

Raceway Wire Size, AWG	P1000, P1100, P1000-KO P1100-KO		P3000 P3000-KO		P3300 P4000		P5000 P5000-KO		P5500 P5500-KO	
	A	B	A	B	A	B	A	B	A	B
14	6	10	5	10	4	6	10	10	10	10
12	6	10	4	10	3	6	10	10	10	10
10	5	8	4	6	–	–	8	10	8	10
8	4	6	3	4	–	–	6	9	6	8
6	2	3	2	2	–	–	4	6	4	6

NOTE: Suitable for number of wires in **Column A** when installed to support and supply electric discharge type lighting fixtures when raceway wiring is suitable for at least 75˚C except wire suitable for 60˚C may be used when clearance between fixtures and raceways is at least 1/2 inch. Also suitable for number of wires in **Column B** when installed to support electric discharge type lighting fixtures when raceway wiring is suitable for at least 75˚C and clearance between fixtures and raceway is a least 1/8 inch.

RECOMMENDED SUPPORT SPACING FOR FIXTURES

Deflection Table
Distance Between Supports

Channel	8'	10'	12'	14'	16'	18'	20'	22'	24'
P4000	.375"								
P3300	.187"								
P2000	.125"	.312"	.625"						
P3000	.100"	.250"	.500"						
P1100	.088"	.250"	.437"	.875"					
P1000		.180"	.312"	.625"	1.000"	1.625"			
P5500				.250"	.500"	.812"	1.620"		
P5000					.310"	.625"	1.000"	1.800"	2.500"
P1001					.310"	.625"	1.000"	1.800"	2.500"
P5001						.200"	.250"	.400"	.500"

Deflections are based on continuity of span and use of 4 ft. fixtures weighing approximately 30 lbs. each. Do not use joiner fittings between supporting hangers. When using knock-out or slotted channels, deflections will be increased approximately 5%. With fixtures spaced 2' - 0" apart, deflection is 60-70% of table. When spaced 4' - 0" apart, deflection is 50-60% of table.

CONVERSION FACTORS FOR BEAMS WITH VARIOUS STATIC LOADING CONDITIONS

All beam load tables are for single-span (simple) beams supported at the ends. These can be used in the majority of cases.

There are times when it's necessary to know what happens with other loading and support conditions. Some common arrangements are shown below. Simply multiply the values from the beam load tables by factors given below.

LOAD AND SUPPORT CONDITION	LOAD FACTOR	DEFLECTION FACTOR
1. Simple Beam, Uniform Load	1.00	1.00
2. Simple Beam, Concentrated Load at Center	.50	.80
3. Simple Beam, Two Equal Concentrated Loads at 1/4 Pts.	1.00	1.10
4. Beam Fixed at Both Ends, Uniform Load	1.50	.30
5. Beam Fixed at Both Ends, Concentrated Load at Center	1.00	.40
6. Cantilever Beam, Uniform Load	.25	2.40
7. Cantilever Beam, Concentrated Load at End	.12	3.20
8. Continuous Beam, Two Equal Spans, Uniform Load on One Span	1.30	.92
9. Continuous Beam, Two Equal Spans, Uniform Load on Both Ends	1.00	.42
10. Continuous Beam, Two Equal Spans, Concentrated Load at Center of One Span	.62	.71
11. Continuous Beam, Two Equal Spans, Concentrated Load at Center of Each Span	.67	.48

EXAMPLE I

PROBLEM:

Determine load and deflection of a P1000 beam continuous over one support and loaded uniformly on one span.

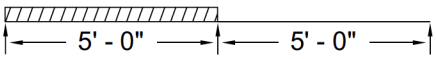

SOLUTION:

A. From load table for P1000 on page 14
load for a 5'-0" span is 680# and deflection is .35".

B. Multiply by factors from table above.
Load = 680# x 1.30 = 884#
Deflection = .35" x .92 = .32"

EXAMPLE II

PROBLEM:

Determine load and deflection of a P5500 cantilever beam with a concentrated load on the end.

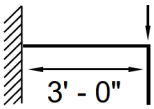

SOLUTION:

A. From load table for P5500 on page 14
load for a 3'-0" span is 2190# and deflection is .09".

B. Multiply by factors from table above.
Load = 2190# x .12 = 263#
Deflection = .09" x 3.20 = .29"

Part One - General

1.01 Scope of work

A. Provide all Unistrut Metal Framing material, fittings and related accessories (Strut System) as indicated on the Contract Drawings.

B. Provide all labor supervision, engineering, and fabrication required for installation of the Strut System in accordance with the Contract Drawings and as specified herein.

C. Related work specified elsewhere.

1.02 Quality Assurance

A. Manufacturer's qualifications:

1. The manufacturer shall not have had less than 10 year's experience in manufacturing Strut Systems.
2. The manufacturer must certify in writing all components supplied have been produced in accordance with an established quality assurance program.

B. Installer's qualifications:

1. Installer must be a Unistrut trained manufacturer's authorized representative/installer with not less than 5 years experience in the installation of Strut Systems of this size and conformation.
2. All strut components must be supplied by a single manufacturer.

C. Standards

1. Work shall meet the requirements of the following standards:

   Federal, State and Local codes; American Iron and Steel Institute (AISI) Specification for the Design of Cold-Formed Steel Structural Members August 19, 1986 Edition, December 11, 1989 Addendum; American Society for Testing And Materials (ASTM).

1.03 Submittals

A. Structural Calculations and Shop Drawings

1. Submit structural calculations for approval by the project engineer. Calculations may include, but are not limited to:
   a. Description of design criteria.
   b. Stress and deflection analysis.
   c. Selection of Unistrut framing members, fittings and accessories.
2. Submit all shop/assembly drawings necessary to completely install the Strut System in compliance with the Contract Drawings.
3. Submit all pertinent manufacturers published data.

1.04 Product Delivery, Storage and Handling

A. All material is to be delivered to the work site in original factory packaging to avoid damage to the finish.

B. Upon delivery to the work site, all components shall be protected from the elements by a shelter or other covering.

1.05 Guarantee

A. Separate guarantees shall be issued from the erector and manufacturer, valid for a period of one year, against any defects that may arise from the installation or manufacture of the Strut System components.

Part Two - Products

2.01 Acceptable Manufacturers

A. All Strut System components shall be as manufactured by UNISTRUT CORPORATION or approved equal as determined by the Architect or Engineer of record in writing 10 days prior to bid date.

2.02 Materials

A. All channel members shall be fabricated from structural grade steel conforming to one of the following ASTM specifications:

   A 570 GR 33, A 653 GR33

B. All fittings shall be fabricated from steel conforming to one of the following ASTM specifications:

   A 575, A 576, A 36 or A 635

C. Substitutions

   Any substitutions of product or manufacturer must be approved in writing 10 days prior to bid date, by Architect or Engineer of record.

2.03 Finishes

A. Strut System components shall be finished in accordance with one of the following standards:

1. PERMA-GREEN II® (GR)
   Rust inhibiting acrylic enamel paint applied by electro-deposition, after cleaning and phosphating, and thoroughly baked. Color is per Federal Standard 595a color number 14109 (dark limit V-). Finish to withstand minimum 400 hours salt spray when tested in accordance with ASTM B117.
2. ELECTRO-GALVANIZED (EG)
   Electrolytically zinc coated per ASTM B 633 Type III SC 1
3. PREGALVANIZED (PG)
   Zinc coated by hot-dipped process prior to roll forming. The zinc weight shall be G90 conforming to ASTM A 653.
4. HOT-DIPPED GALVANIZED (HG)
   Zinc coated after all manufacturing operations are complete. Coating shall conform to ASTM A 123 or A 153
5. SPECIAL COATING / MATERIAL
   (Describe as applicable)

Part Three - Execution

3.01 Examination

A. The installer shall inspect the work area prior to installation. If work area conditions are unsatisfactory, installation shall not proceed until satisfactory corrections are completed.

3.02 Installation

A. Installation shall be accomplished by a fully trained manufacturer authorized installer.

B. Set Strut System components into final position true to line, level and plumb, in accordance with approved shop drawings.

C. Anchor material firmly in place. Tighten all connections to their recommended torques.

3.03 Cleanup

A. Upon completion of the section of work, remove all protective wraps and debris. Repair any damage due to installation of this section of work.

3.04 Protection

A. During installation, it shall be the responsibility of the installer to protect this work from damage.

B. Upon completion of this scope of work, it shall become the responsibility of the general contractor to protect this work from damage during the remainder of construction on the project and until substantial completion.

The specifications, descriptions, information and illustrated material herein are submitted solely for evaluation by others and since the use of its products and information is not within its control, Unistrut assumes no obligation or liability for such information and does not guarantee results from the use of said products or the information herein. Reference should be made to original or primary source data along with standard accepted industry practice. The material herein is as of the date of publication and is subject to change without notice.

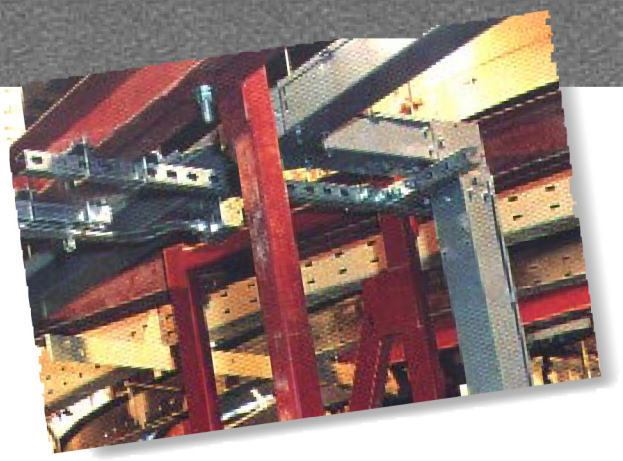

BEAM-MOUNTED BUSWAY SUPPORTS
Various component types, sizes and configurations can be quickly and easily secured with the Unistrut system.

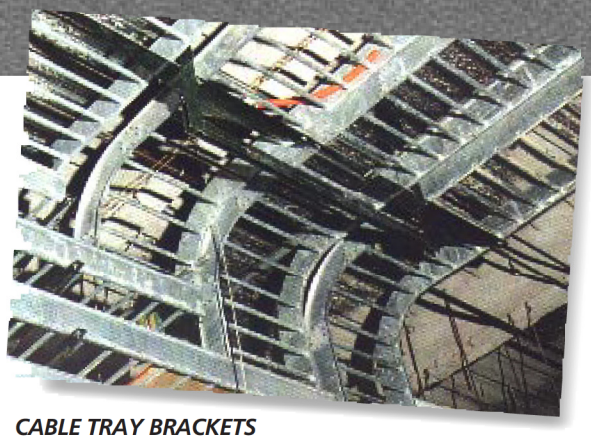

CABLE TRAY BRACKETS
Unistrut Metal Framing and brackets form an ideal cable tray support system where tight quarters require maximum support flexibility in minimum space.

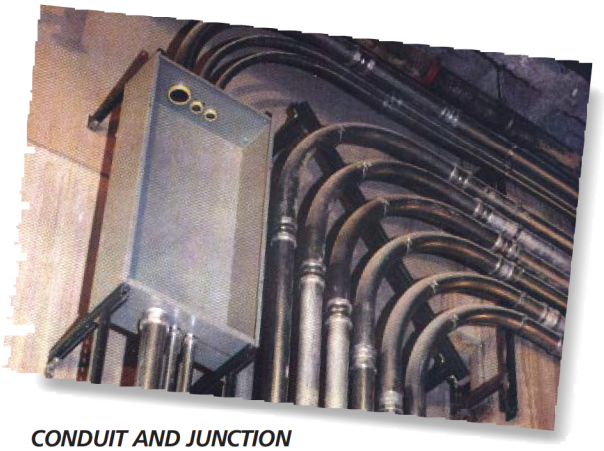

CONDUIT AND JUNCTION BOX SUPPORTS
Cut-to-length Unistrut channel accommodates any side-by-side pipe or conduit runs.

OVERHEAD RECTIFIER SUPPORT
Prefabricated back-to-back Unistrut sections provide plenty of beam strength for this rectifier.

CEILING GRID
Drops for this grid are fabricated from threaded rod suspended from Unistrut channel, which is attached to the roof structure with Unistrut beam clamps.

UNISTRUT
Metal Framing

Unistrut Corporation
35660 Clinton
Wayne, MI 48184
1-800-521-7730
FAX: 1-313-721-4106

A World Of Support

There are over 60 Unistrut service centers throughout the U.S. and Canada. For the location nearest you, call 1-800-521-7730

PRINTED IN USA

MFEB-1 897